Intelligent Pumping Controls & Energy Optimizations

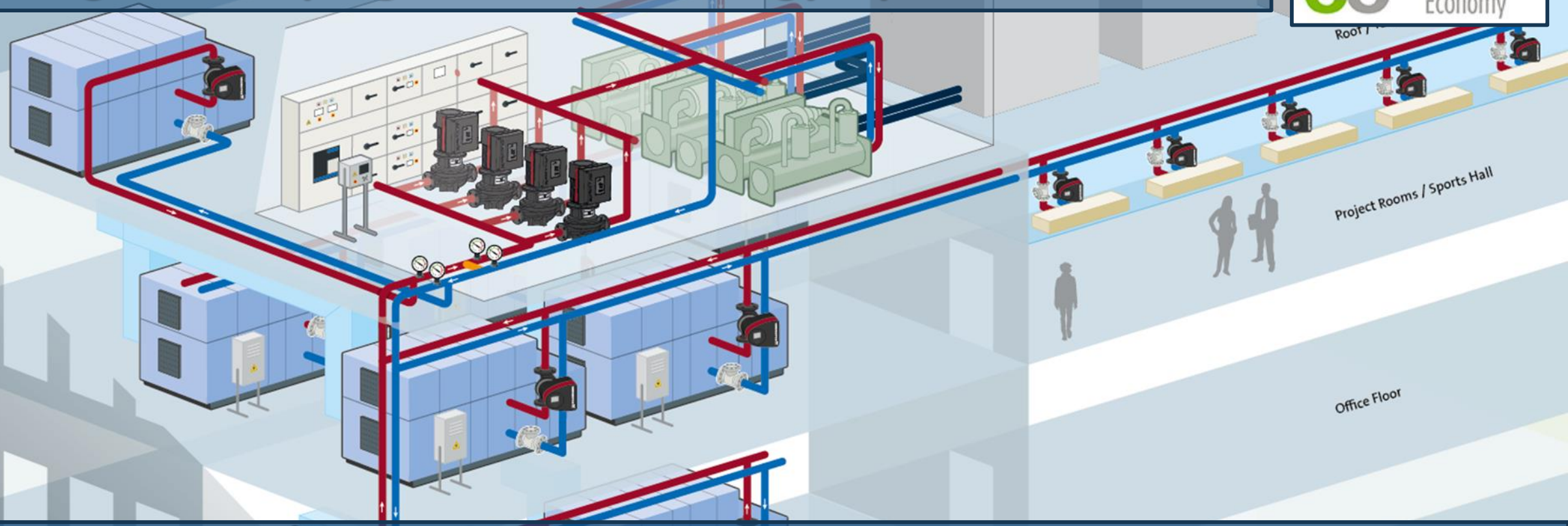

Distributed Pumping System

Presented by

B.Srinivasa Rajkumar, Key Account Manager

srinivas@grundfos.com

Conventional Chilled Water Pumping System

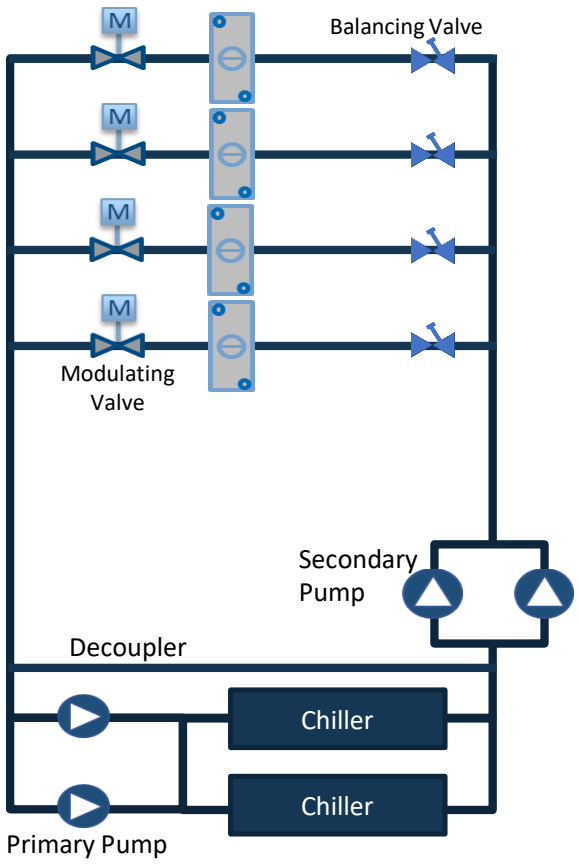

Primary-Secondary

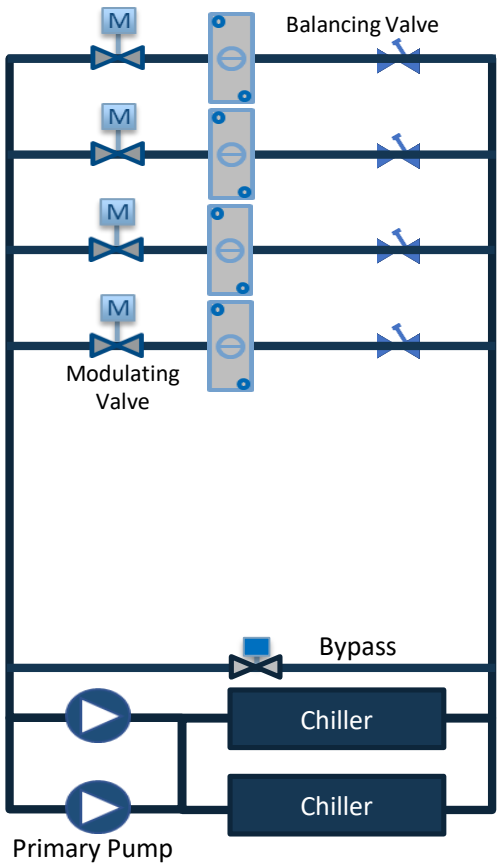

Primary-Only

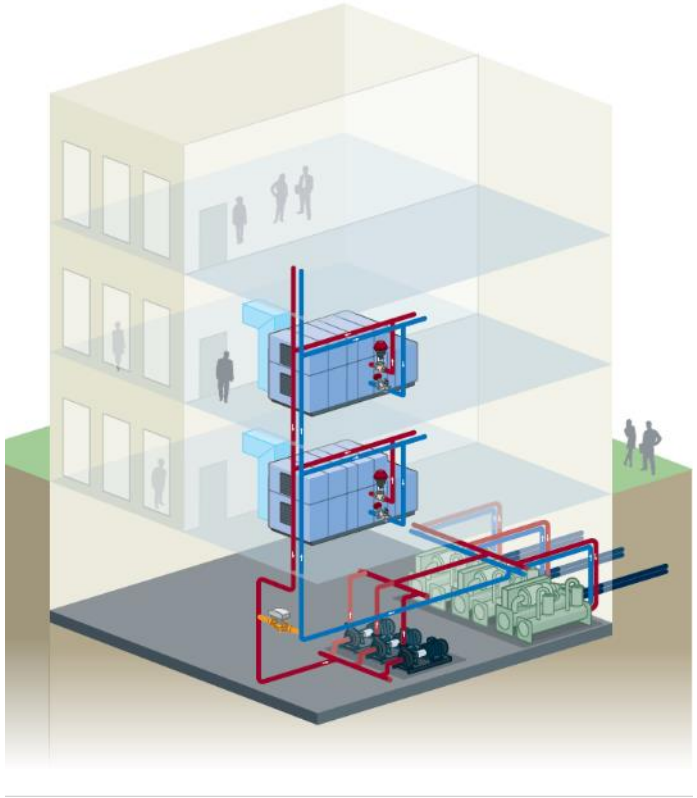

Common challenges in Conventional Chilled Water Systems

- Balancing and Low ΔT issues
- Commissioning issues
- Variance from design

What kind of Air-conditioning System we want?

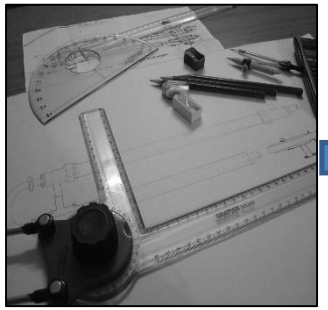

Design

Installation

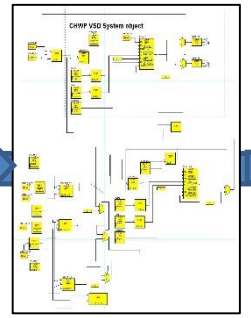

Control Strategy & Programming

Commissioning

Turning On & Use

Comfort ?

Energy Consumption ?

Plug & Play

- No need to know what is Differential Pressure (DP)
- Where to install DP sensors?
- What DP setpoint value to input to DDC?
- No need water balancing

Otherwise?

- Minimum commissioning
- Self balancing System

Distributed Pumping System

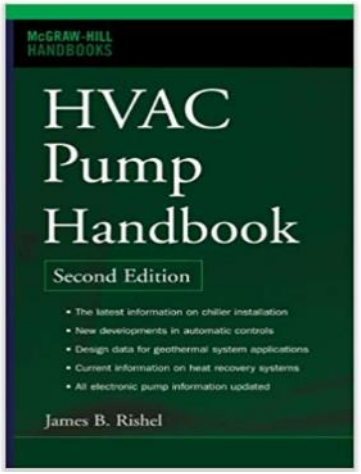

HVAC Pump Handbook
Second Edition
(McGraw-Hill)
June 13, 2006

" …Distributed pumping is a very simple pumping arrangement as well as the most efficient pumping system for (1) large, multiple-zone buildings and
(2) multiple-building systems with central energy plants.

It eliminates all overpressure caused by differences in pump head requirements between zones and buildings…"

Distributed Pumping System

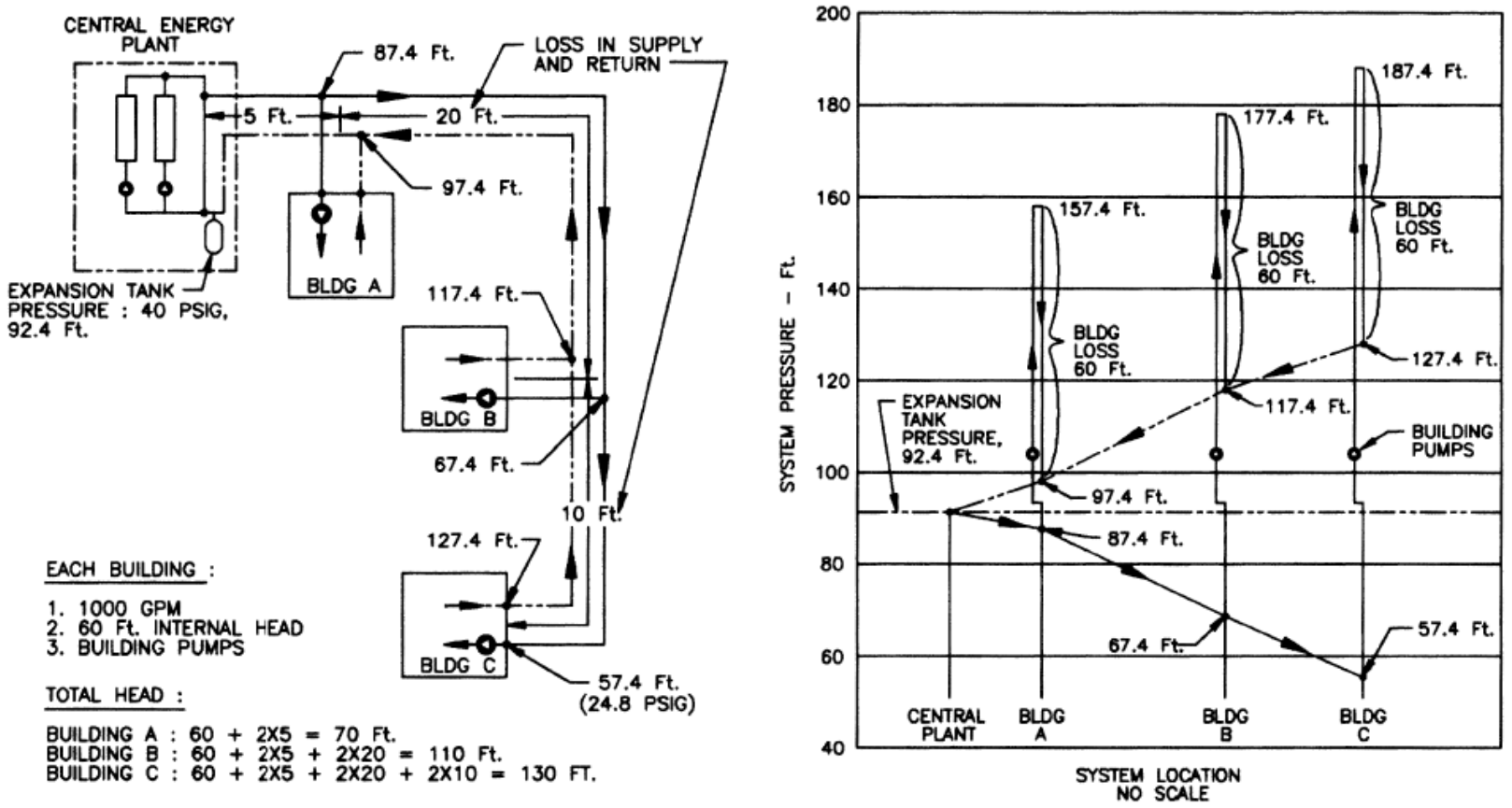

a. Typical distributed pumping, three building system.

b. Pressure gradient diagram for typical, three building system.

Figure 15.12 Typical three-building distributed pumping system.

ASHRAE Handbook Distributed Pu
Example:

Distributed Pumping System

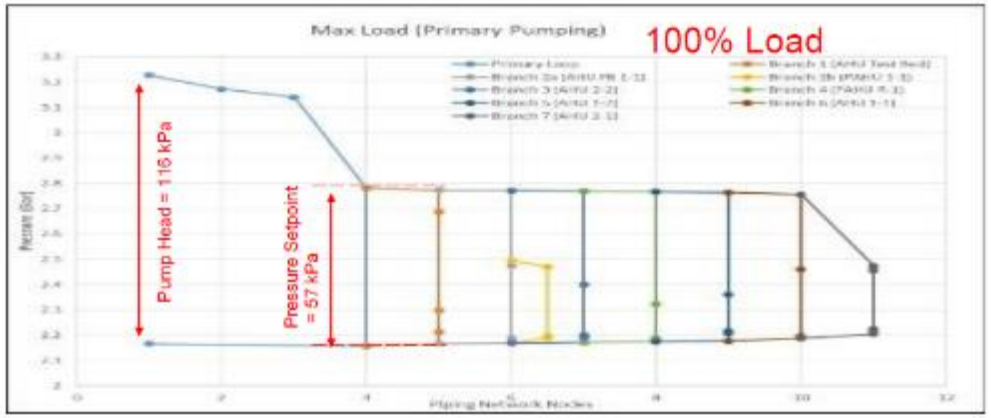

Figure 5.5 Node Pressures at the Piping Network for P-Only Pumping (100% Load)

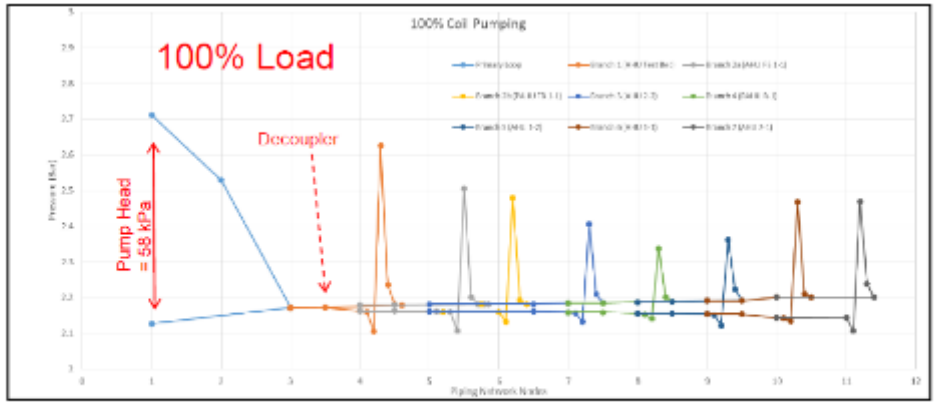

Figure 5.8 Node Pressures at the Piping Network for P-CS Pumping at 100% Load

Unlike conventional pumping system, no pressure setpoint is required for the P-CS Pumping System.

The control program will adjust the variable primary pump speed based on whether the supply water flow is meeting the demand.

If the supply is too much it will reduce the pump speed, and if the supply is low it will increase the pump speed.

Distributed Pumping System

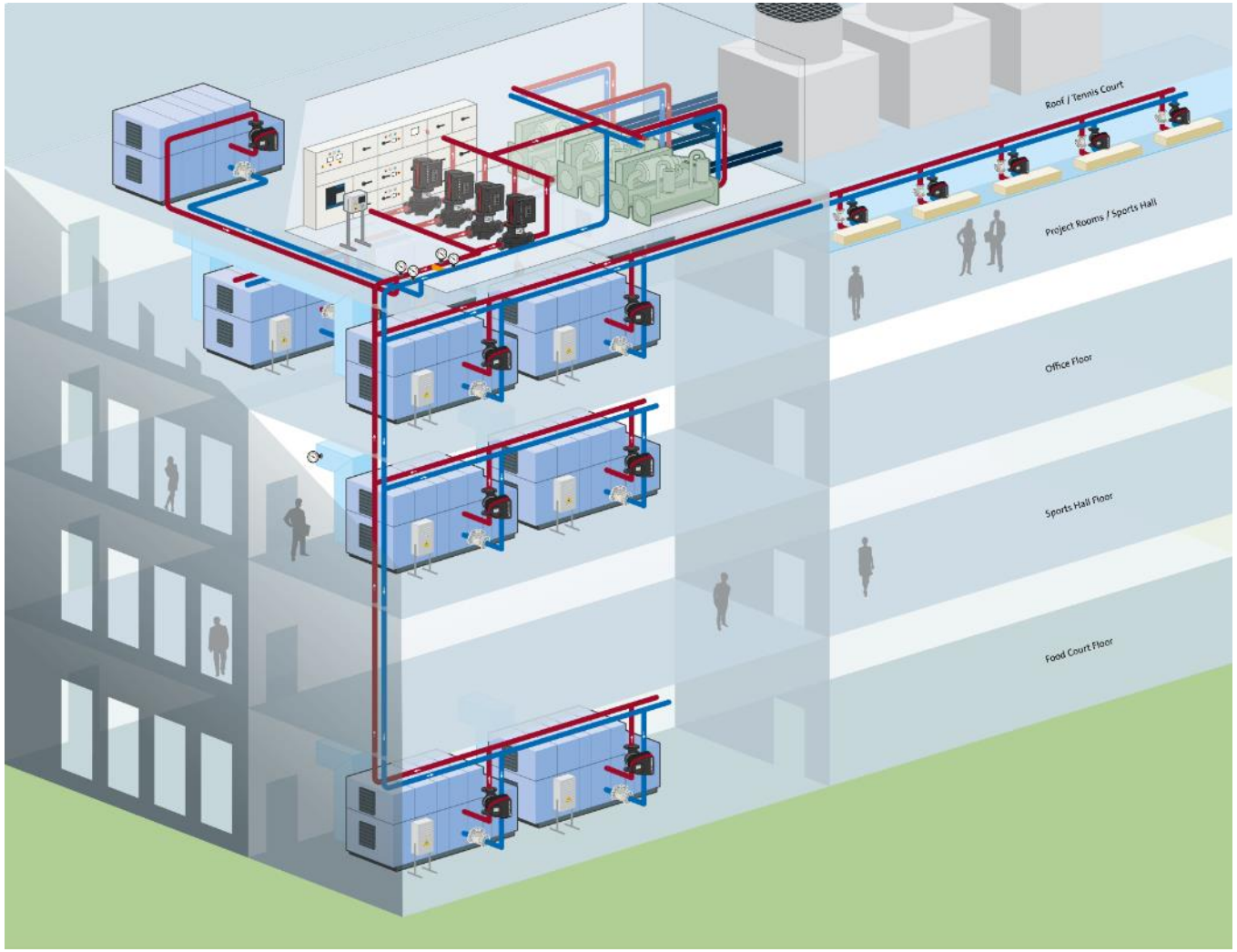

Distributed pumping is a paradigm shift towards **decentralized pumps** instead of central pumps in distribution networks

By using coil pumps the system is "**relieved**" from all the **pressure consuming components** and equipped with units that generate **pressure only when and where is needed**.

Distributed Pumping System – Case Study

Collaborators

G-ENERGY GLOBAL

EWT COI NGEE ANN POLYTECHNIC

GRUNDFOS

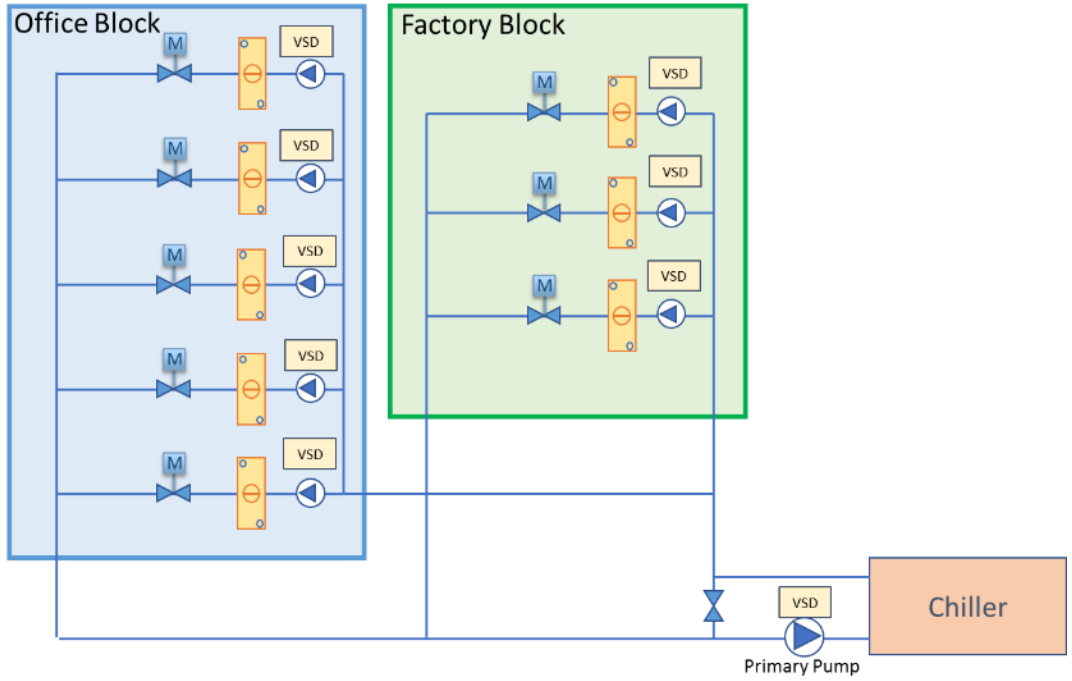

Air-conditioned Area: 3460 m^2
Factory Floor Area (partially cooled): 8300 m^2

6 units of AHU
2 units of PAHU
2 units of Chillers (1 standby)
- Carrier 30XW552P [572 kW (163 RT)]
2 units of 5 kW Primary Pump

Distributed Pumping System – Case Study

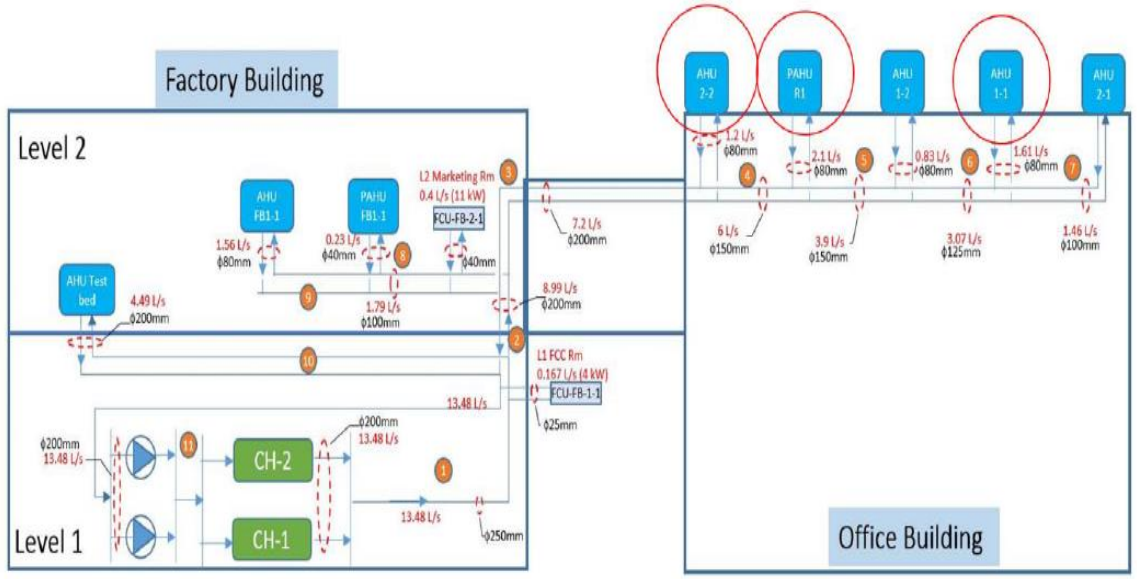

Figure 3.3 Schematic of Chilled Water Piping Network

Figures 7.1 and 7.2 show the original and modified schematic diagrams for the above AHUs and PAHUs, and for all of them the works were the same and shown as follows:

(i) Removal of balancing valve (Figure 7.3)
(ii) Installation of coil pump (Figure 7.4)
(iii) Fixing of new off-coil temperature sensors in air ducts (Figure 7.5)
(iv) Changing the primary pump to smaller size (Figure 7.6)

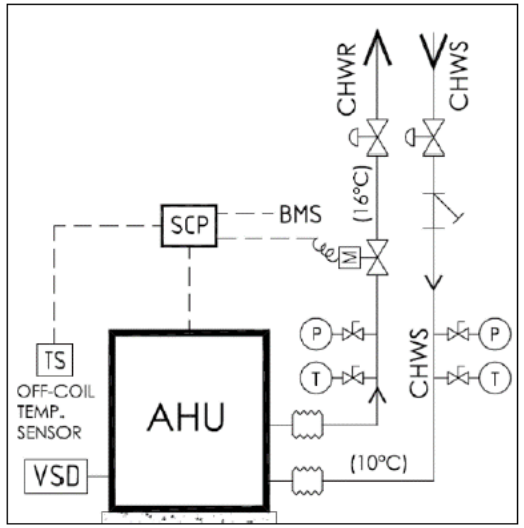

Figure 7.1 Original AHU Piping Connection Detail at Grundfos Building

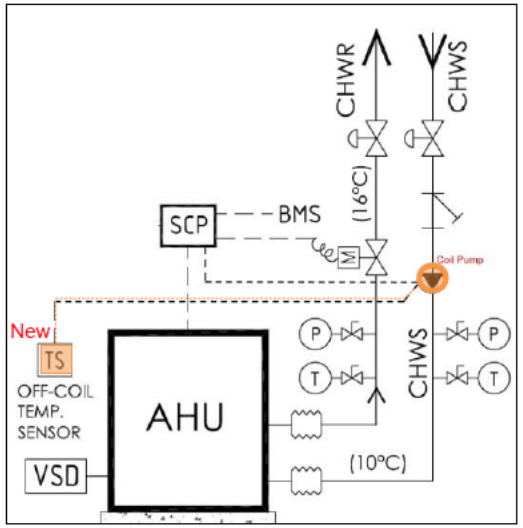

Figure 7.2 Modified AHU Piping Connection Detail with Magna3 Pump for P-CS System

Distributed Pumping System – Case Study

Primary–Only Pumping System

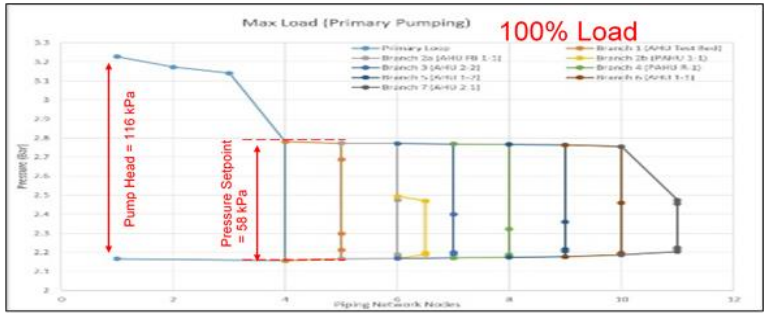

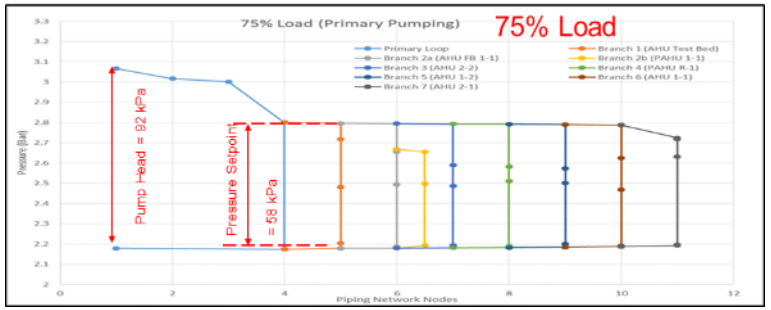

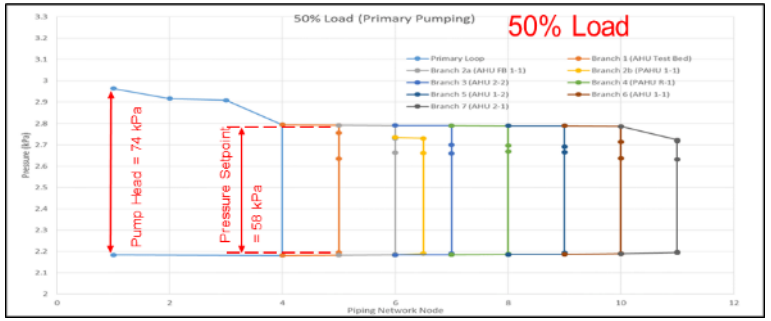

Primary–Coil Secondary (P-CS) Pumping System

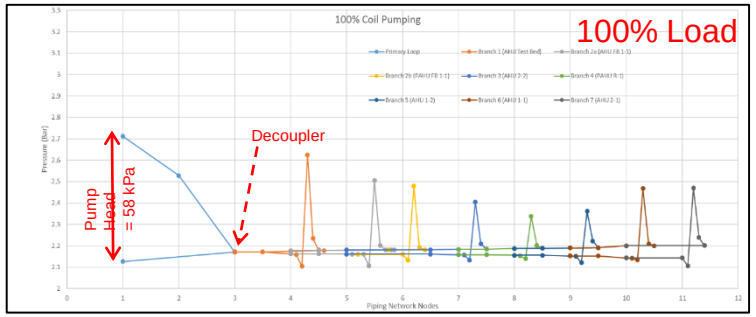

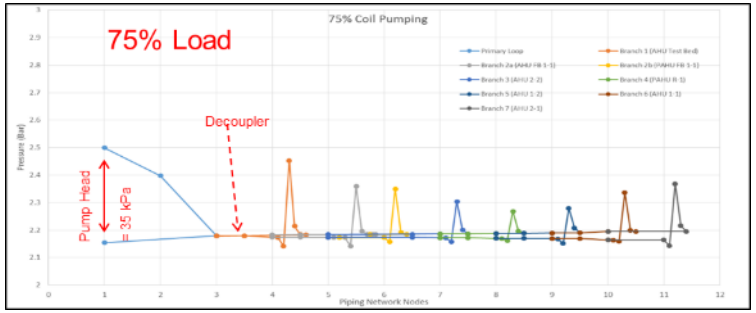

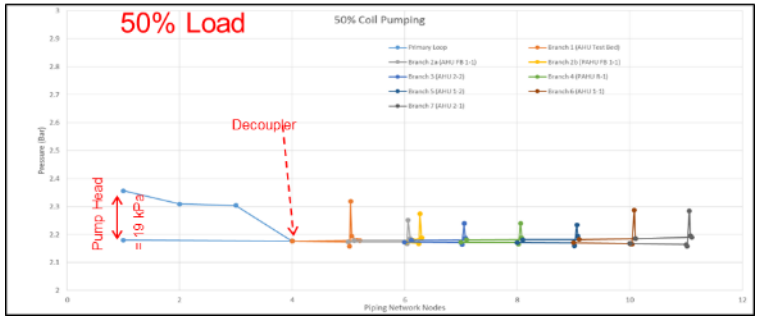

Computer Simulation

- Simulate Pressure & Flow at all locations in the piping network
- Simulate Power Consumption of Pumps
- Simulate Part load conditions

Distributed Pumping System – Case Study

2016		2017				
Nov	Dec	Jan	Feb	Mar	Apr	May
Baseline Data Collection						
		Retrofitting & commissioning				
				Post-retrofit Data Collection		
						Data Analysis

Reduced Primary Pump Size

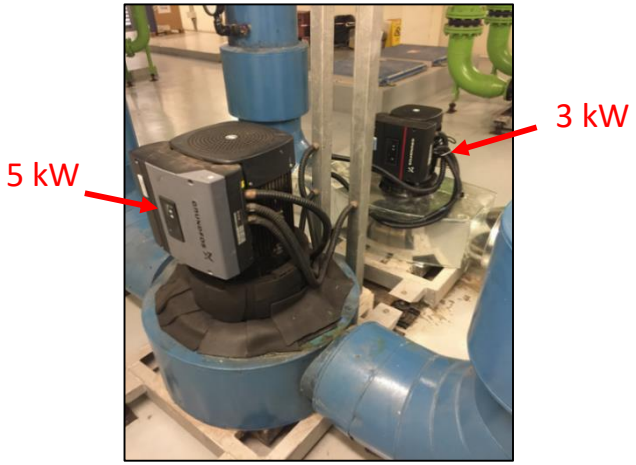

Removal of Balancing Valve

Installation of Coil Pumps

Distributed Pumping System – Case Study

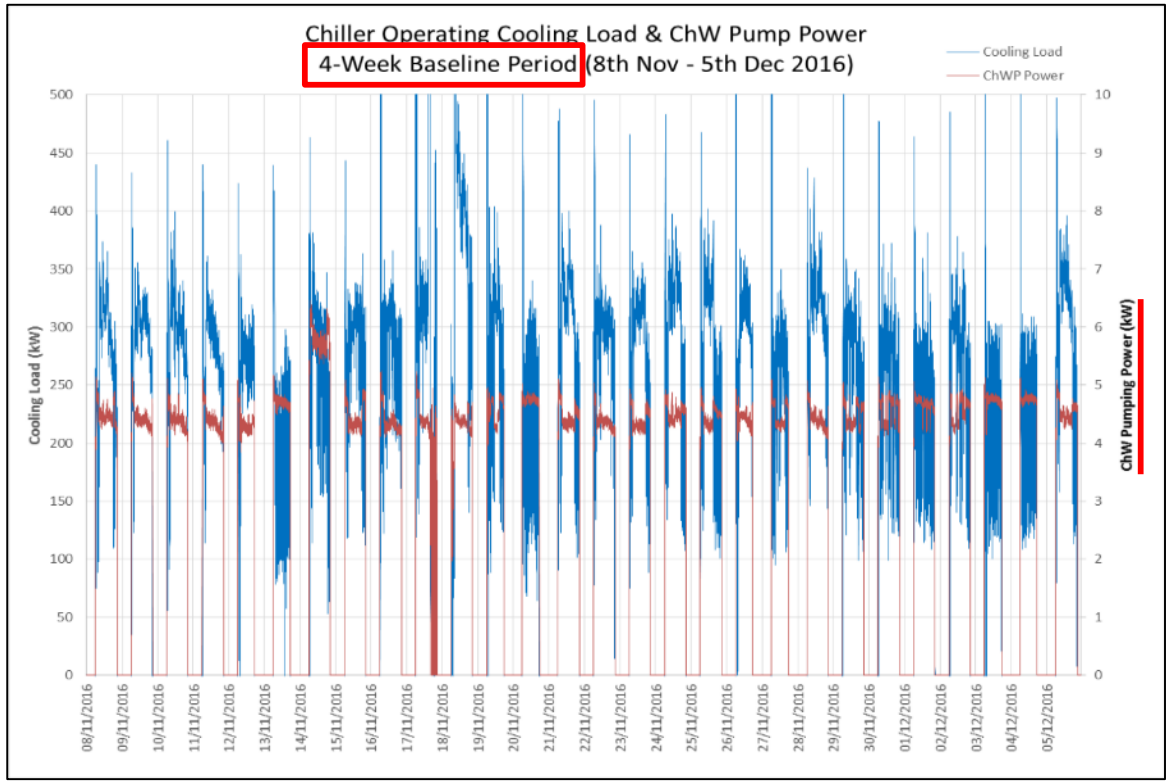

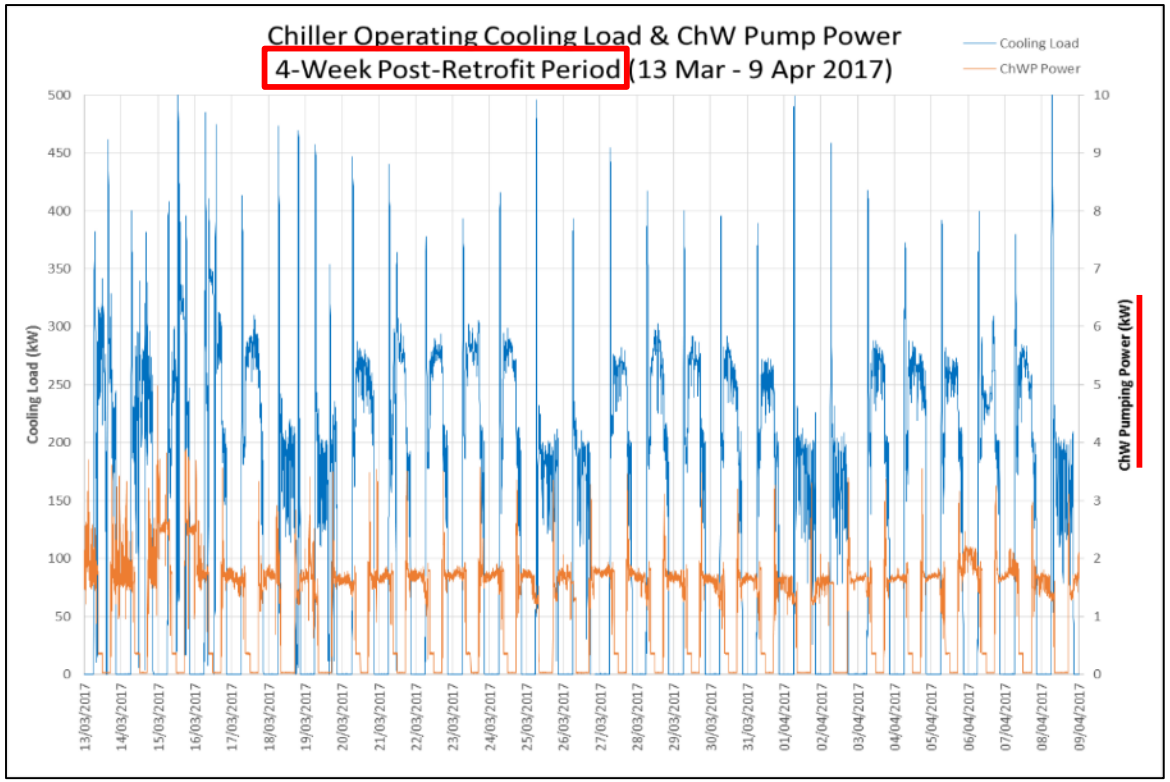

- Less Pumping Power

Distributed Pumping System – Case Study

Results

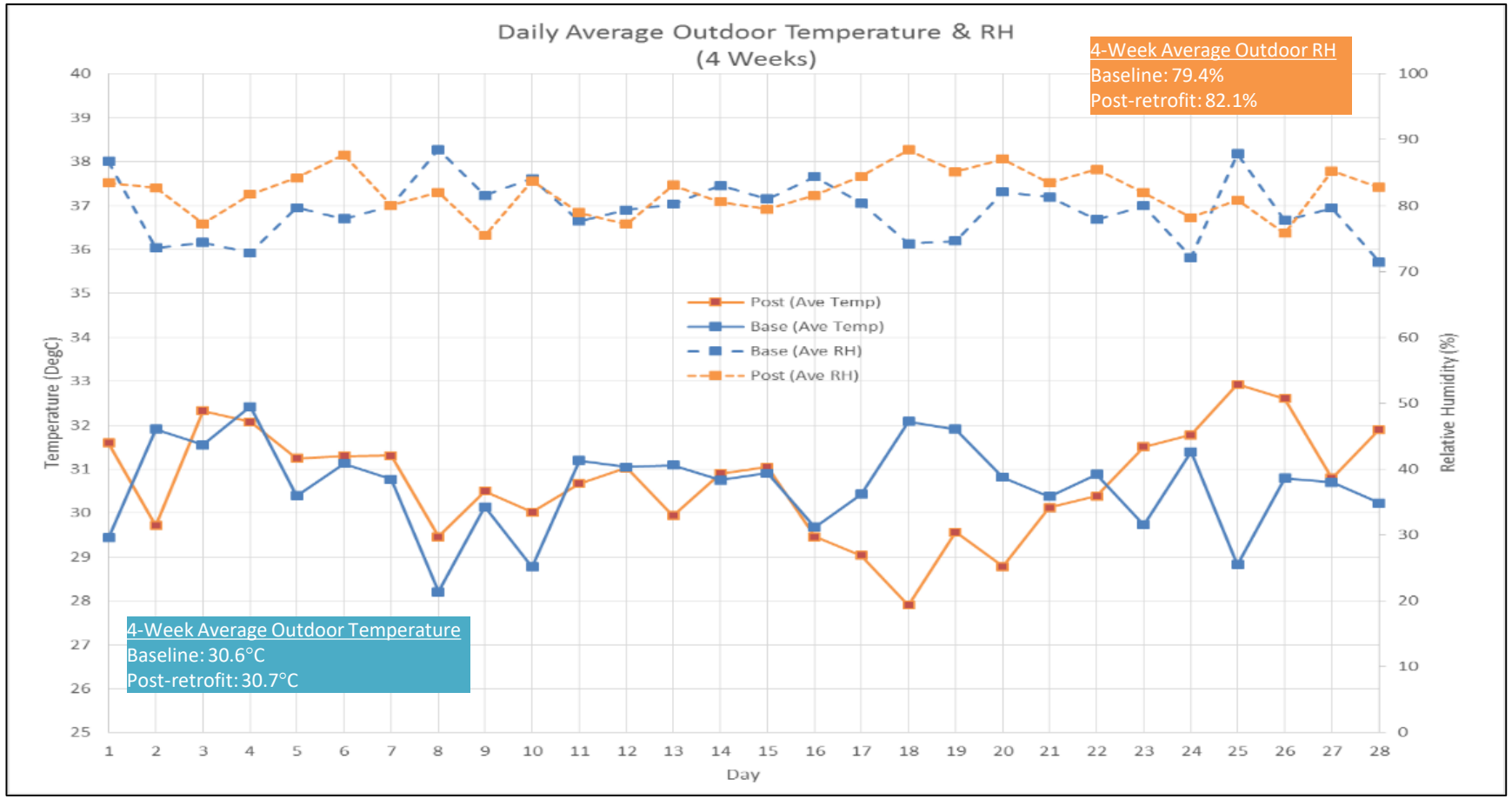

Outdoor Weather (Air-con operation periods)

Average Temperature - Post-retrofit period (no significant difference)

Average Relative Humidity – Post-retrofit period (higher)

Other Influencing Factors

- No change of AHU supply air setpoints
- No change of room temperature setpoints
- No change of office and factory operations

Distributed Pumping System – Case Study

CHW Pumping Energy Consumption (4 weeks)

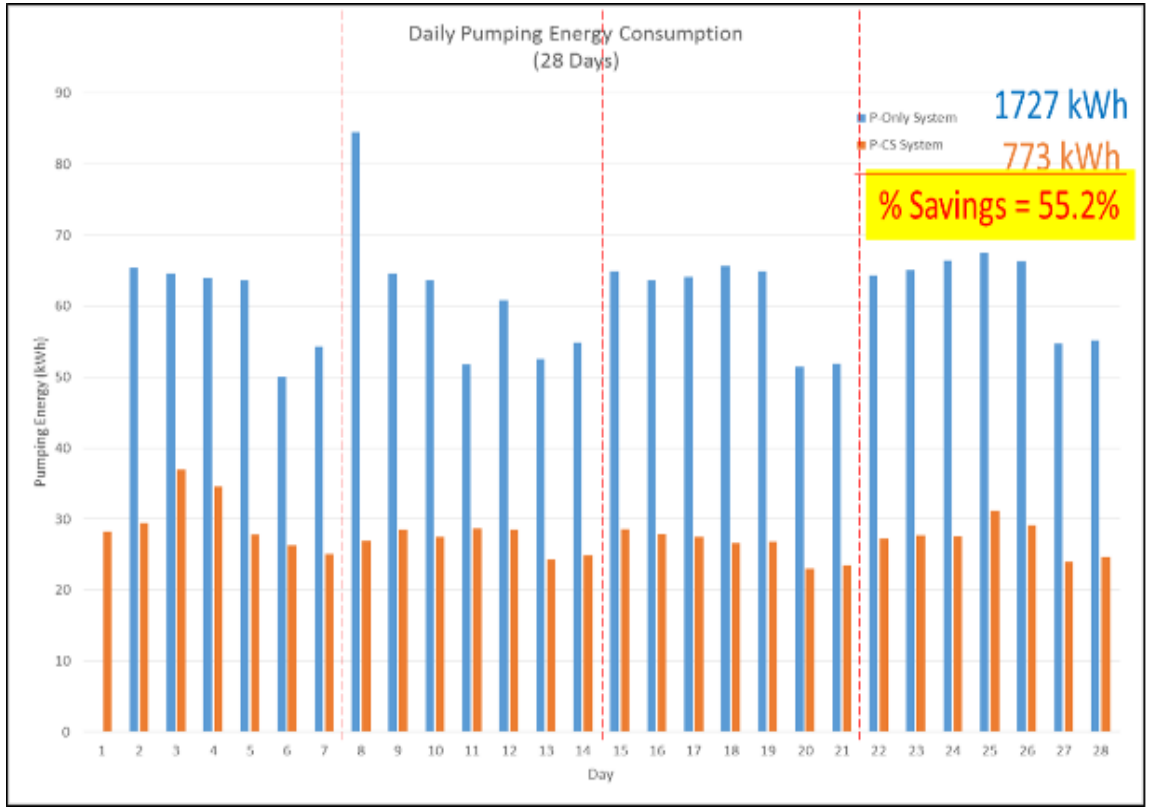

Annual CHW Pumping Energy Savings

= (1727-773) x 52/4

= 12,402 kWh

Distributed Pumping System – Case Study

Larger Temperature Difference (ΔT)

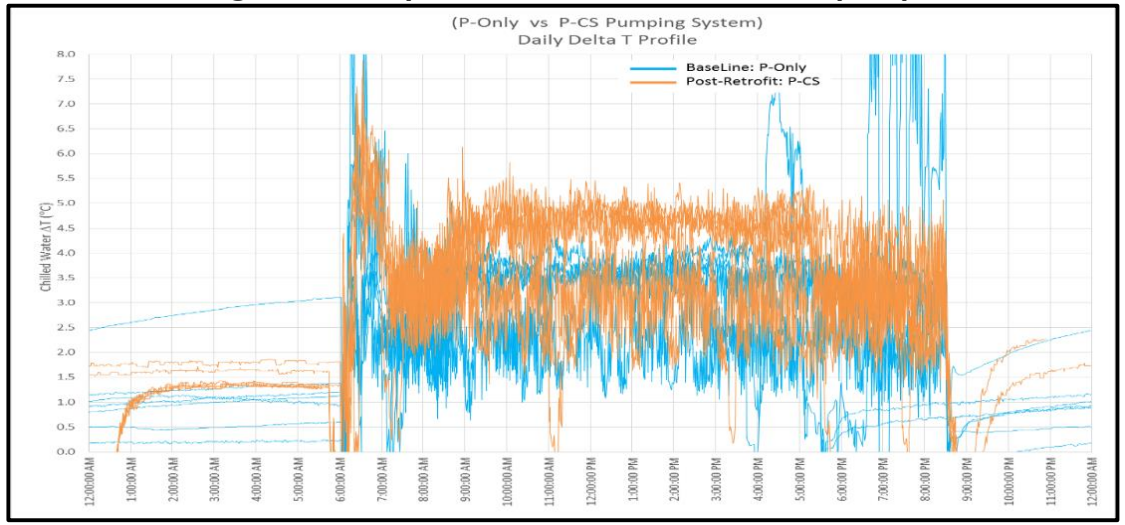

- Total Chilled Water Produced/Pumped - Reduced by 30.7%

CHW Pumping EER

(4 weeks)	Original P-Only (kW/RT)	Post-Retrofit P-CS (kW/RT)
Pumping EER	0.059	0.032

	Primary Only (Kwh)	Primary + CS (Kwh)	% Savings
CHW Pumping Energy Consumption	1,727	773	55.2%

NGEE ANN POLYTECHNIC

- Singapore
  - Temperature : 28°C
  - Humidity (RH) : 75 %
- Office Building from 2014
- BCA Green Mark Platinum
- Constant Load profile
- BMS system
- ~ 6000 m^2 cooling area
- 15 Coil Pumps used

SAVE PUMP & CHILLER ENERGY

- 32% pump savings (kW/RT)
- ΔT raised by 1,5°C to 6,8°C (design value is 7°C)

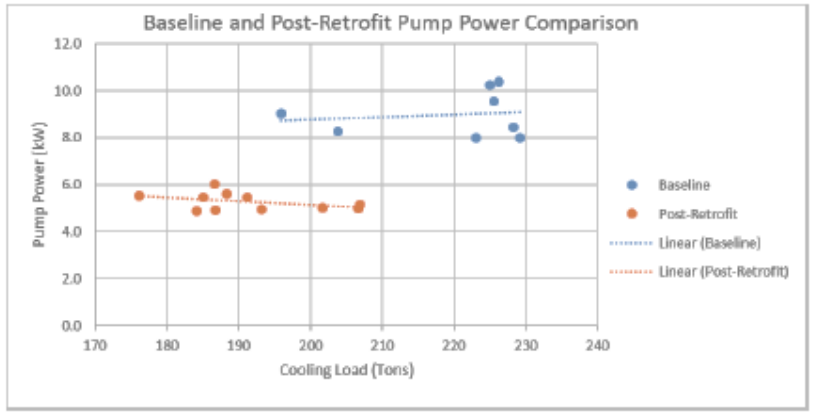

Figure 5. Pump Power consumption in relation to the cooling load

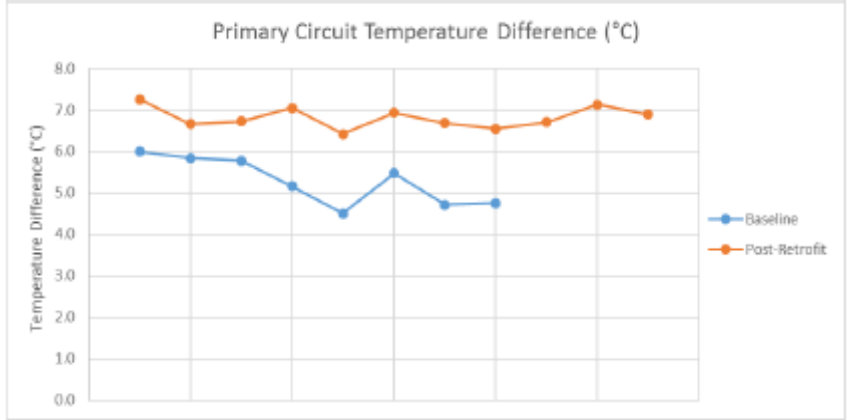

Figure 6. Primary side temperature difference (DT)



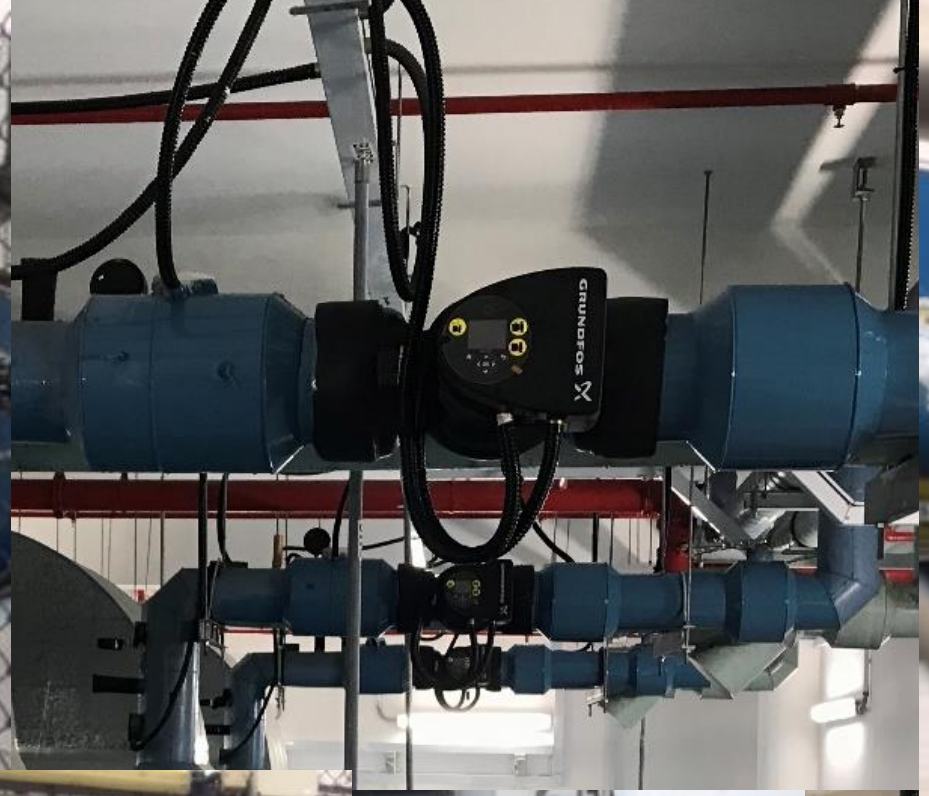
GRUNDFOS






GRUNDFOS

Distributed Pumping System – Few references

Tamara Hotel and Convention Centre , Trivandrum
HVAC Consultants – M/s Alex Cyriac, Cochin

Air-conditioned Area: 1,12,285 Sq.Ft

18 units of AHU
3 units of HRW
2 units of Chillers - Bluestar – 220 TR
2 units of 11 kW Variable Primary Pump
2 units of 7.5 kw Condenser Water Pump
48 units of Coil Pumps

Distributed Pumping System – Few references

	Primary Only (Kwh)	Primary + CS (Kwh)	% Savings
CHW Pumping Energy Consumption	97,052	63,430	34.64%

Distributed Pumping System – Few references

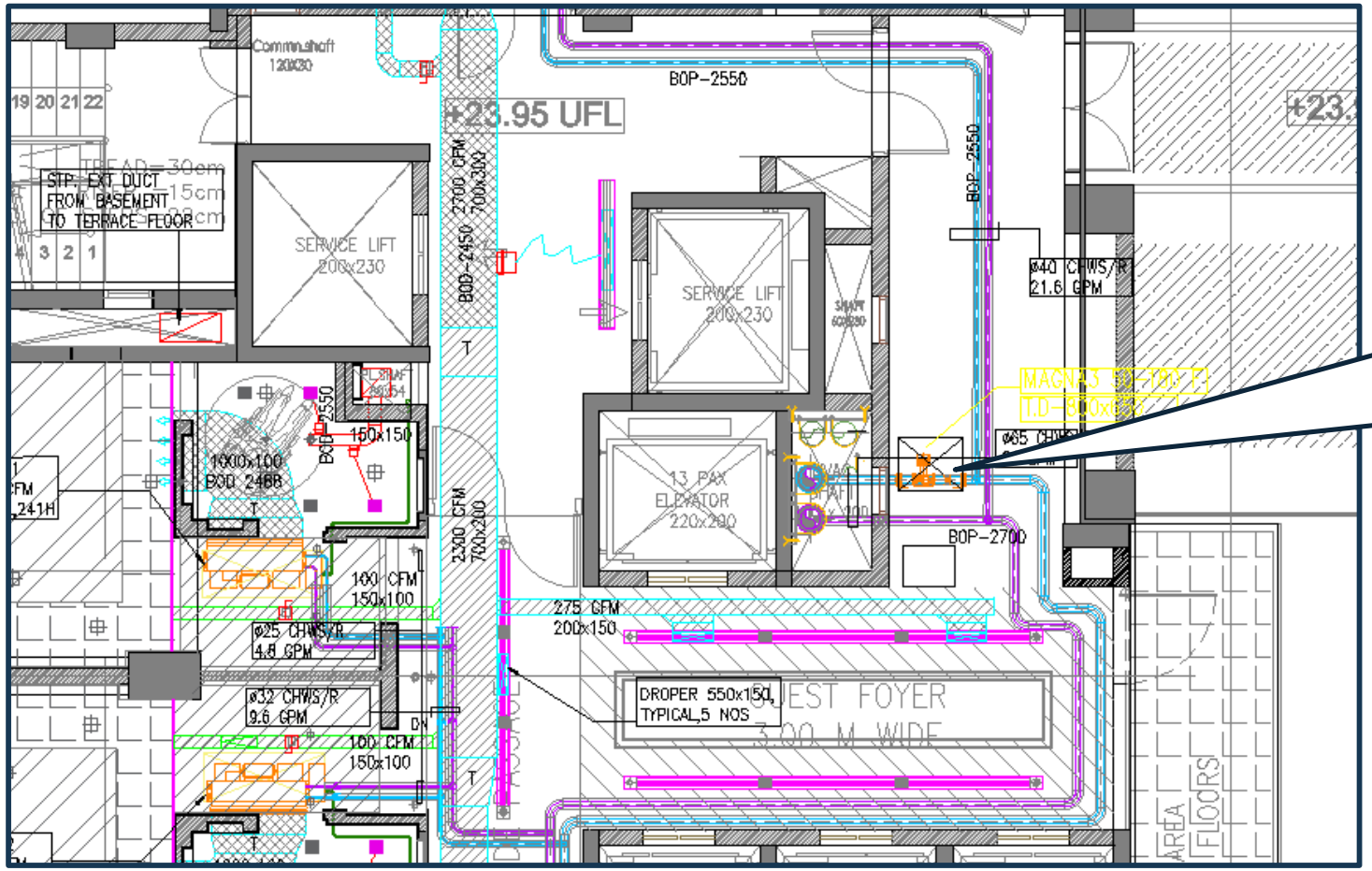

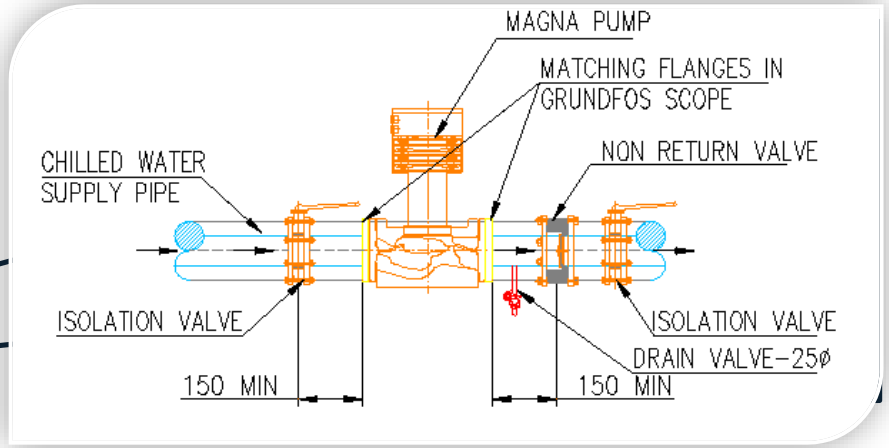

Distributed Pumping System – Few references

Kostal Project, Ranipet
HVAC Consultants – M/s Enersave Solutions
Chennai

Air-conditioned Area: 47,218 Sq.Ft

5 units of AHU
1 Chillers - 200 TR
Climaveneta FX/CA/3902
2 units of 7.5 kW Variable Primary Pump
5 units of Coil Pumps

Distributed Pumping System – Few more references

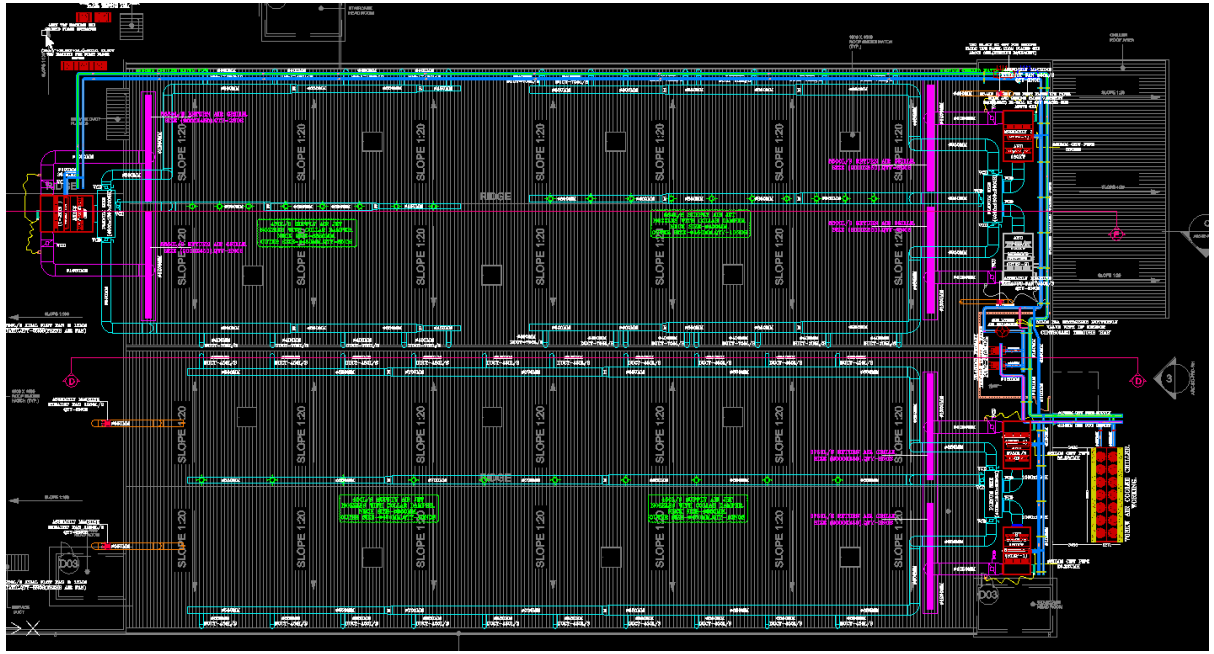

	Primary Only (Kwh)	Primary + CS (Kwh)	% Savings
CHW Pumping Energy Consumption	56,368	45,749	19.22%

Distributed Pumping System

Distributed Pumping

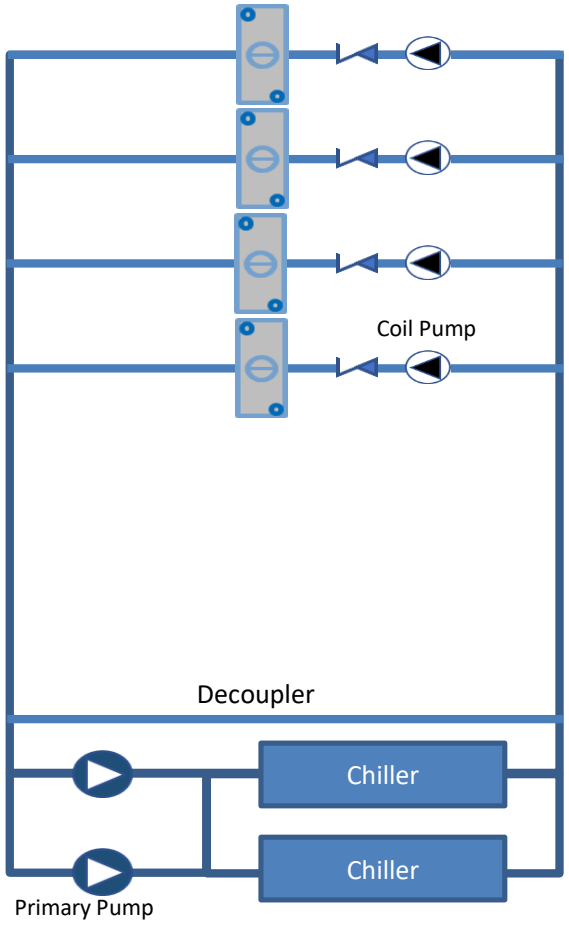

Primary-Coil Secondary (P-CS)

ADVANTAGES

- Hydraulically Self-Balanced
  - No balancing valves required

- No modulating valves required
  - Less flow resistance in the piping network
  - **Savings in Pumping Energy**

- No DP sensors and DP setpoint required
  - Control strategy for variable Primary Pump speed based on chilled water supply meeting exactly with Load required

- Comparable capital cost
  - Primary-Only System:
    - *Balancing valves + Modulating valves + Larger primary pumps*
  - Primary-Coil Secondary (P-CS) System:
    - *Coil pumps + check valves + smaller primary pumps*

- Simpler commissioning process
  - Shorter commissioning period
  - Man power savings in commissioning

- Energy savings in Chillers & Plant
  - No excessive amount of chilled water to be cooled

Thank you for your valuable time